DWG NO.

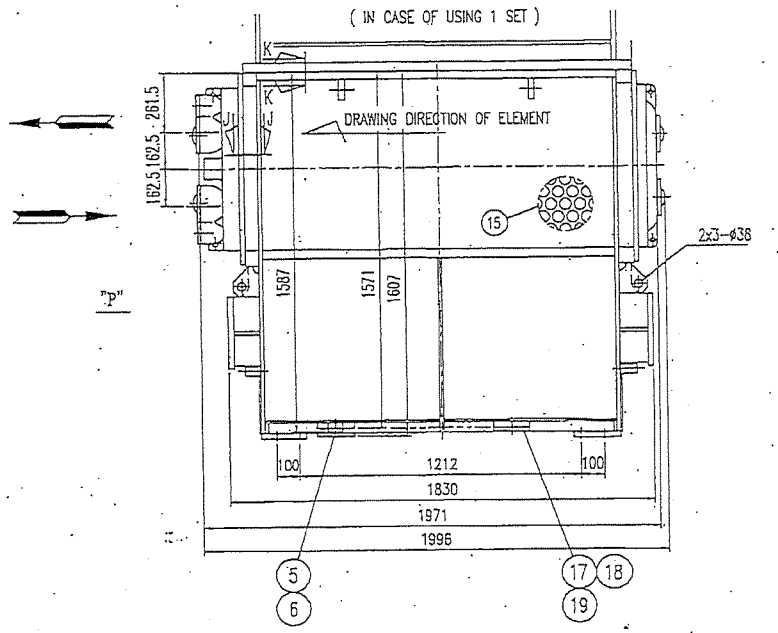

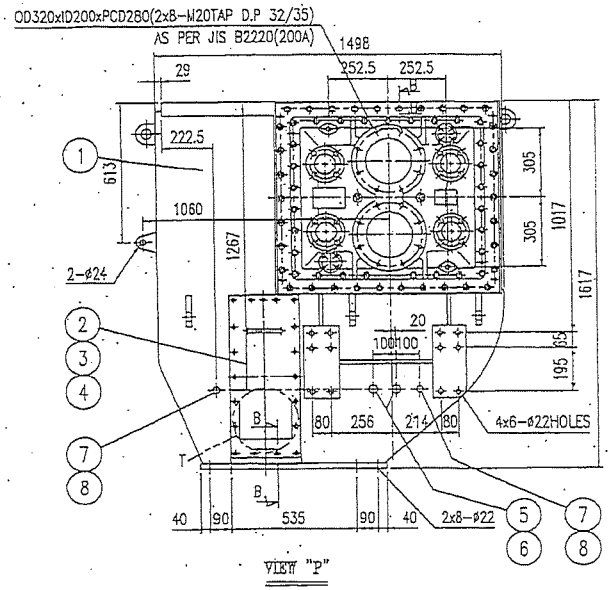

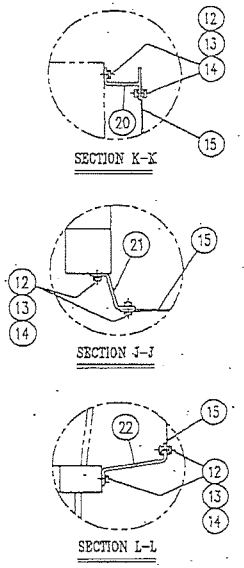

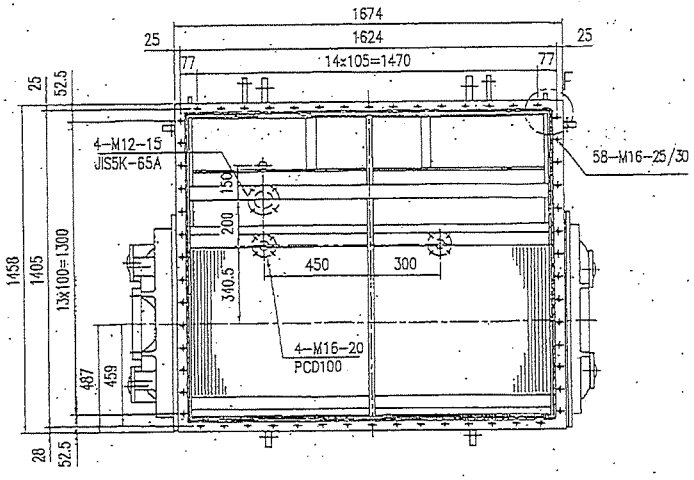

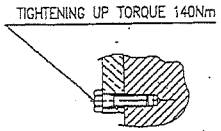

SECTION B-B

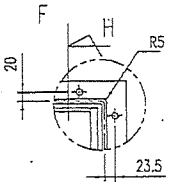

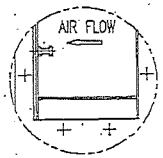

VIEW "T"

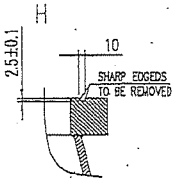

* PAINT SPECIFICATION *

1. OUTSIDE PAINT
   1) 1ST : ZINC RICH PRIMER 60 μ
   2) 2ND : HEAT RESISTANCE SILVER 30 μ
2. INSIDE PAINT
   1) 1ST : TO ALL INSIDE SURFACE ZINC RICH PRIMER 60 μ
   2) 2ND : TO ALL SURFACE, EXCEPT COOLER INSERT SIDE KOREPOX H.S EH3200 300 μ(GRAY)

PART NO.	PART NAME	MATERIAL	WORK Q'TY/SET	SPARE Q'TY/SET	REMARK
22	SUPPORT	SS400	5		–
21	SUPPORT	SS400	6		–
20	SUPPORT	SS400	7		–
19	BOLT	8.8	4		M12x30
18	GASKET	ASBE-FREE	1		1.5t
17	BLIND FLANGE	SS400	1		5K-50A
16	BLANK				
15	GUARD PLATE	SS400	1		–
14	BOLT	8.8	36		M5x15
13	WASHER	SK6M	54		FOR M5
12	NUT	8.8	18		FOR M5
11	BLANK				
10	BLANK				
9	BLANK				
8	PACKING	COPPER	4		*17x*25
7	PLUG	SS400	4		PF3/8
6	PACKING	COPPER	5		*27x*35
5	PLUG	SS400	5		PF3/4
4	BOLT (MIST CATCHER)	8.8	36		M16x35
3	PACKING (MIST CATCHER)	ASBE-FREE	2		–
2	COVER (MIST CATCHER)	SS400	2SETS		–
1	AIR COOLER HOUSING	–	1SET		–

APPROVED	SCALE NONE	PROJECT LKM-(G)K	
CHECKED		TITLE ARR. OF AIR COOLER	
DRAWN H.C.Oh 2004.01.07	PROJECTION 1ST	DWG NO. DHE041223-A00	2 / 1 / 0
DongHwa Entec			REV

DHE041223-A001